CRUISE CONTROL

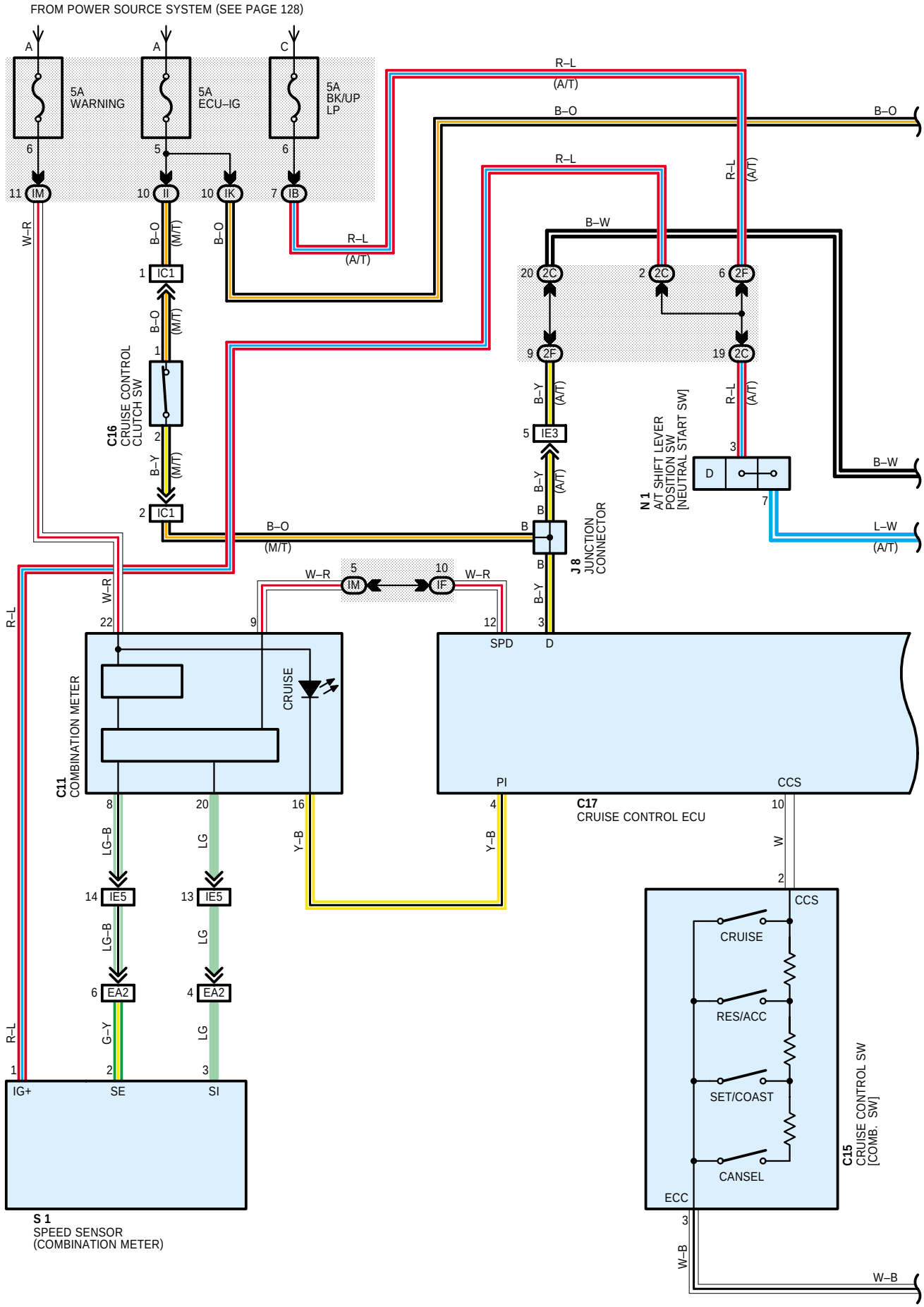

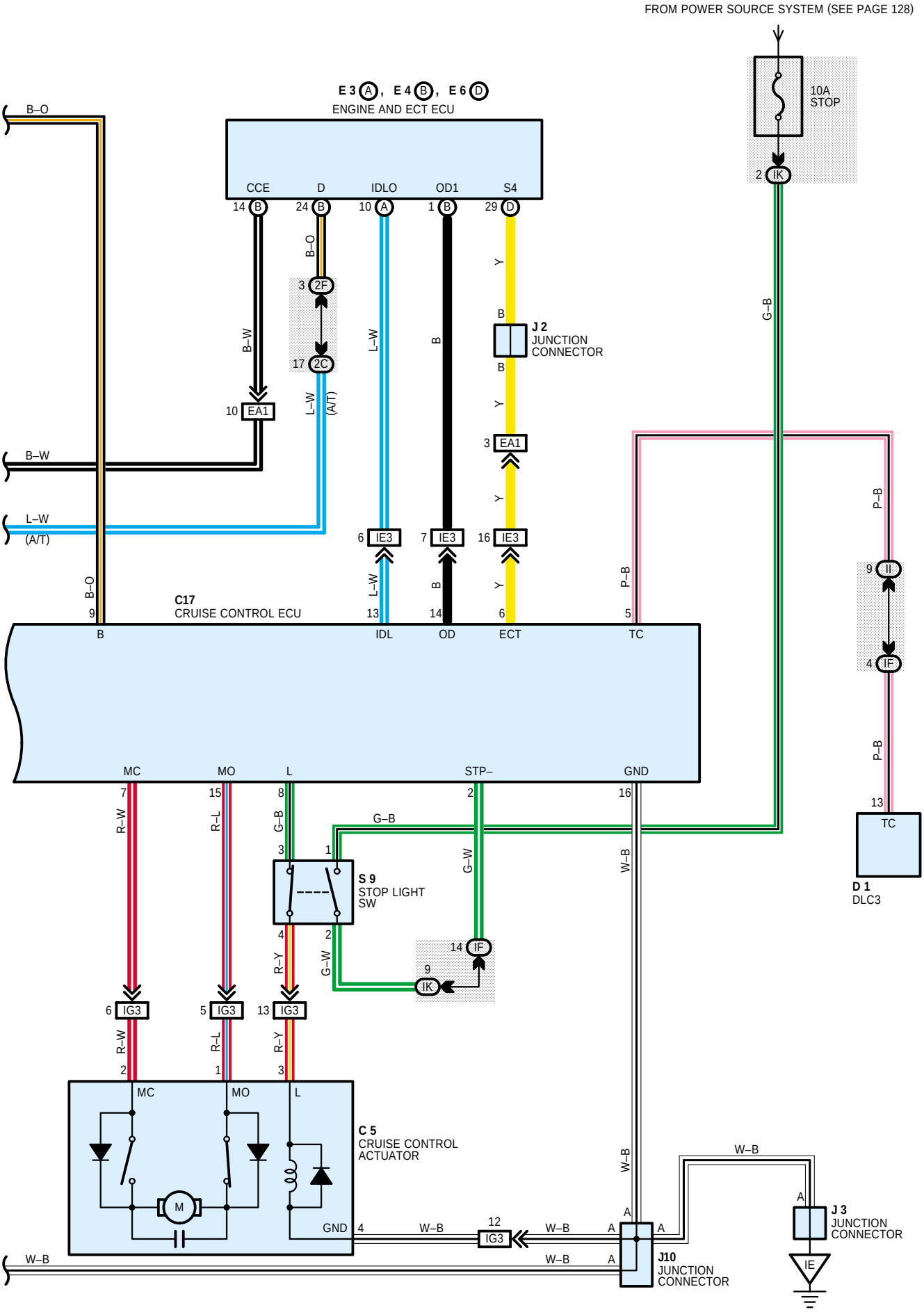
FROM POWER SOURCE SYSTEM (SEE PAGE 128)
10A
STOP
E 3 (A), E 4 (B), E 6 (D)
ENGINE AND ECT ECU
CCE
D
IDLO
OD1
S4
J 2
JUNCTION
CONNECTOR
C17
CRUISE CONTROL ECU
B
IDL
OD
ECT
TC
MC
MO
L
STP–
GND
S 9
STOP LIGHT
SW
D 1
DLC3
C 5
CRUISE CONTROL
ACTUATOR
J 3
JUNCTION
CONNECTOR
J10
JUNCTION
CONNECTOR
(A/T)